US007325366B1

(12) **United States Patent**
Hohmann, Jr. et al.

(10) **Patent No.: US 7,325,366 B1**
(45) **Date of Patent: Feb. 5, 2008**

(54) **SNAP-IN WIRE TIE**

(75) Inventors: **Ronald P. Hohmann, Jr.**, Hauppauge, NY (US); **Ronald P. Hohmann**, Hauppauge, NY (US)

(73) Assignee: **Hohmann & Barnard, Inc.**, Hauppauge, NY (US)

(*) Notice: Subject to any disclaimer, the term of this patent is extended or adjusted under 35 U.S.C. 154(b) by 263 days.

(21) Appl. No.: **11/199,108**

(22) Filed: **Aug. 8, 2005**

(51) **Int. Cl.**

E04B 1/38	(2006.01)
E04B 1/16	(2006.01)
E04B 1/98	(2006.01)
E04B 5/00	(2006.01)
E04C 1/40	(2006.01)
E04C 5/00	(2006.01)
E04H 9/02	(2006.01)

(52) **U.S. Cl.** **52/513**; 52/379; 52/712; 52/713; 52/714; 52/167.1; 52/410

(58) **Field of Classification Search** 52/379, 52/513, 712–714, 410
See application file for complete search history.

(56) **References Cited**

U.S. PATENT DOCUMENTS

819,869	A *	5/1906	Dunlap	52/714
1,794,684	A *	3/1931	Handel	52/709
2,780,936	A *	2/1957	Hillberg	52/710
3,030,670	A *	4/1962	Bigelow	52/650.3
3,277,626	A *	10/1966	Brynjolfsson et al.	52/713
3,341,998	A *	9/1967	Lucas	52/379
3,377,764	A *	4/1968	Storch	52/713
3,568,389	A *	3/1971	Gulow	52/714
4,021,990	A *	5/1977	Schwalberg	52/479
4,373,314	A *	2/1983	Allan	52/434
4,473,984	A	10/1984	Lopez	
4,596,102	A *	6/1986	Catani et al.	52/508
4,598,518	A	7/1986	Hohmann	
4,738,070	A *	4/1988	Abbott et al.	52/710
4,827,684	A *	5/1989	Allan	52/378
4,843,776	A *	7/1989	Guignard	52/714
4,869,038	A	9/1989	Catani	
4,875,319	A	10/1989	Hohmann	52/383
4,955,172	A *	9/1990	Pierson	52/710
5,207,043	A *	5/1993	McGee et al.	52/379
5,408,798	A *	4/1995	Hohmann	52/562
5,440,854	A *	8/1995	Hohmann	52/489.1
5,454,200	A *	10/1995	Hohmann	52/513
5,634,310	A *	6/1997	Hohmann	52/513
5,671,578	A *	9/1997	Hohmann	52/562
5,816,008	A *	10/1998	Hohmann	52/565
6,209,281	B1 *	4/2001	Rice	52/714
6,279,283	B1 *	8/2001	Hohmann et al.	52/379

(Continued)

Primary Examiner—Richard E. Chilcot, Jr.
Assistant Examiner—Hunter M Dreidame
(74) *Attorney, Agent, or Firm*—Siegmar Silber

(57) **ABSTRACT**

A seismic construction system for a cavity wall is disclosed. The system is shown in three exemplary applications—a masonry backup wall with ladder- or truss-type reinforcement cooperating with a snap-in wire tie; a masonry backup wall with ladder- or truss-type reinforcement with a high-span wall anchor cooperating with a low-profile, snap-in wire tie; and a drywall backup wall with internal insulation, a sheetmetal wall anchor, and snap-in wire ties. The snap-in wire ties accommodate a continuous reinforcing wire for the outer wythe, which reinforcing wire snaps into the wire housings therefor with a predetermined force. With the interconnected wall and veneer anchors and the respective reinforcing elements a seismic construct is formed.

5 Claims, 6 Drawing Sheets

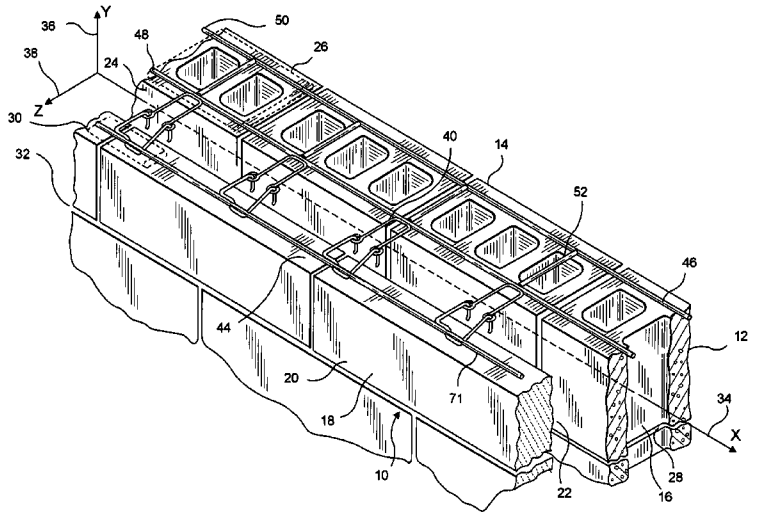

U.S. PATENT DOCUMENTS

6,332,300	B1 *	12/2001	Wakai	52/713
6,351,922	B1 *	3/2002	Burns et al.	52/713
6,668,505	B1 *	12/2003	Hohmann et al.	52/565
6,735,915	B1 *	5/2004	Johnson, III	52/379
6,789,365	B1	9/2004	Hohmann et al.	
6,851,239	B1 *	2/2005	Hohmann et al.	52/513
6,941,717	B2 *	9/2005	Hohmann et al.	52/506.01
7,017,318	B1 *	3/2006	Hohmann et al.	52/562
2001/0054270	A1 *	12/2001	Rice	52/714
2004/0083667	A1 *	5/2004	Johnson	52/379

* cited by examiner

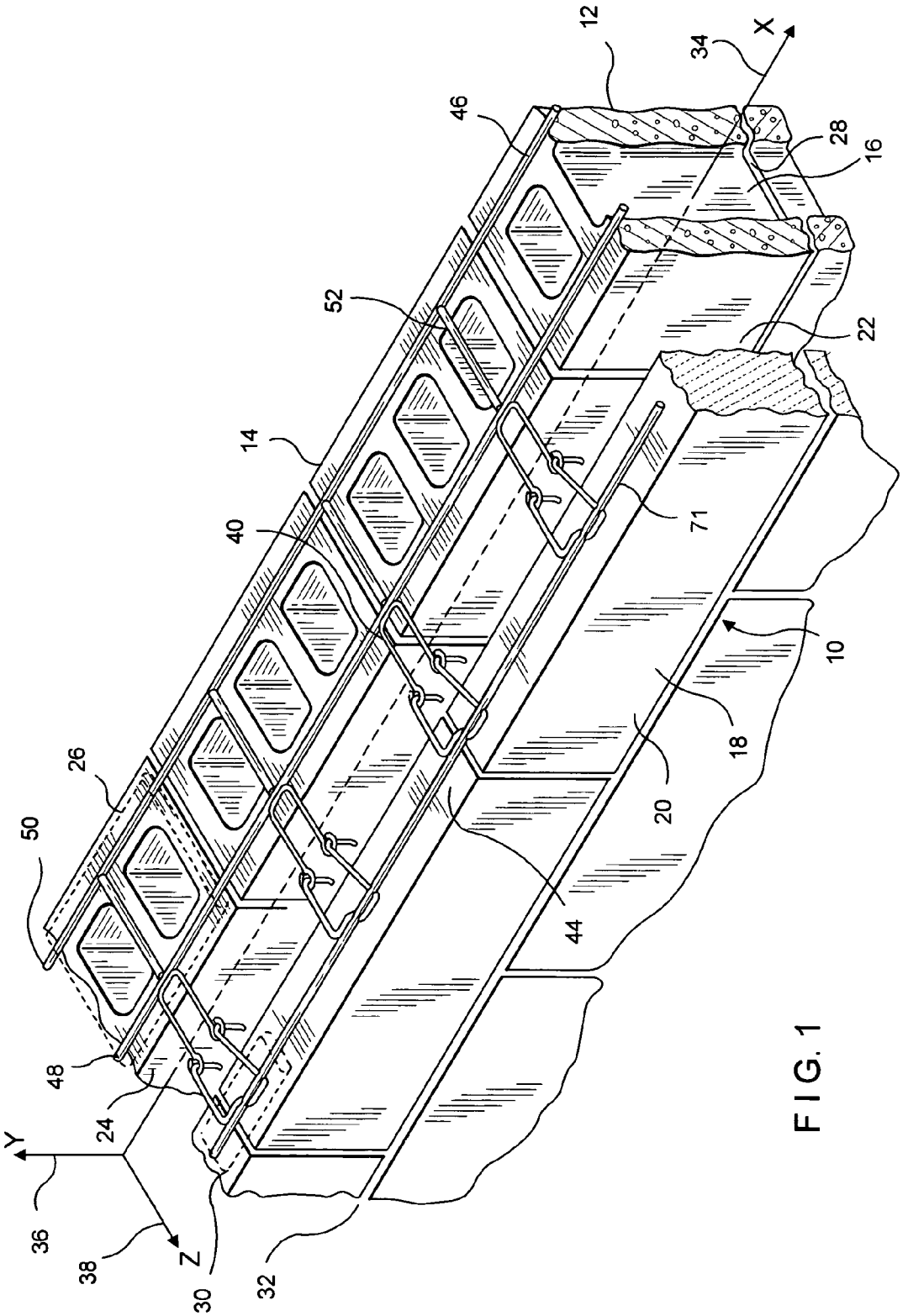

FIG. 1

FIG. 2

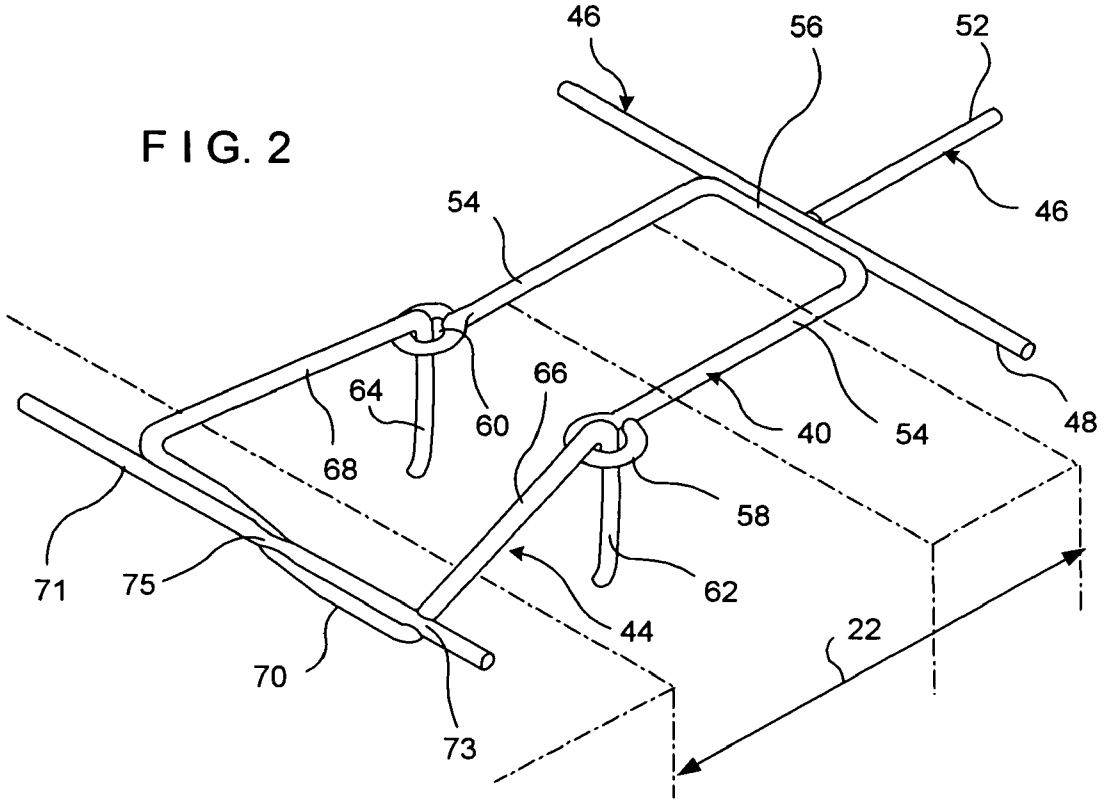
46
56
52
46
54
64
66
60
68
40
54
48
58
71
75
62
44
22
70
73

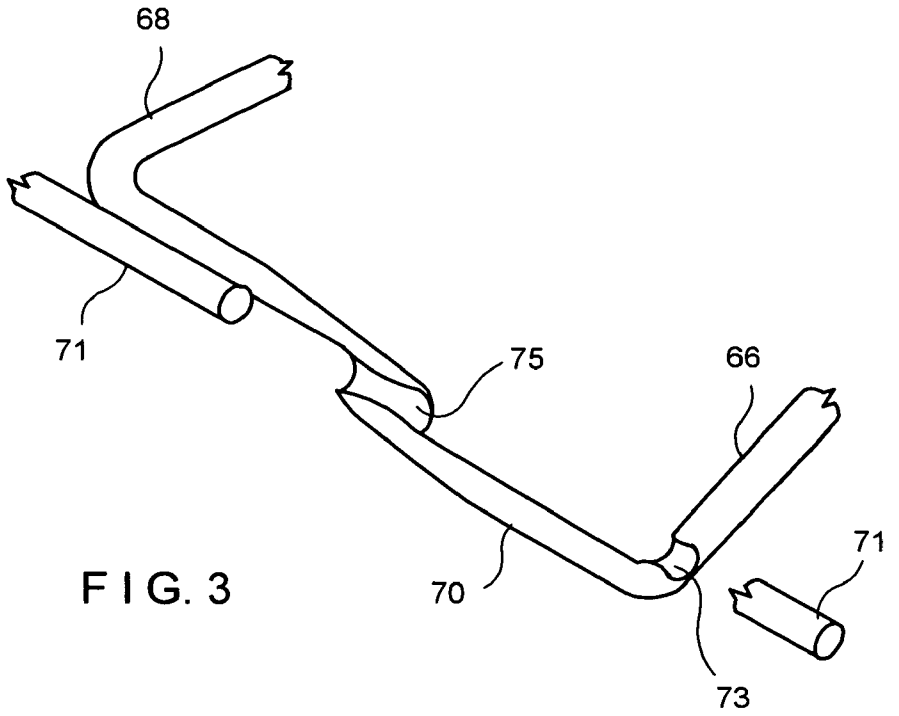
68
71
75
66
71
70
73

FIG. 3

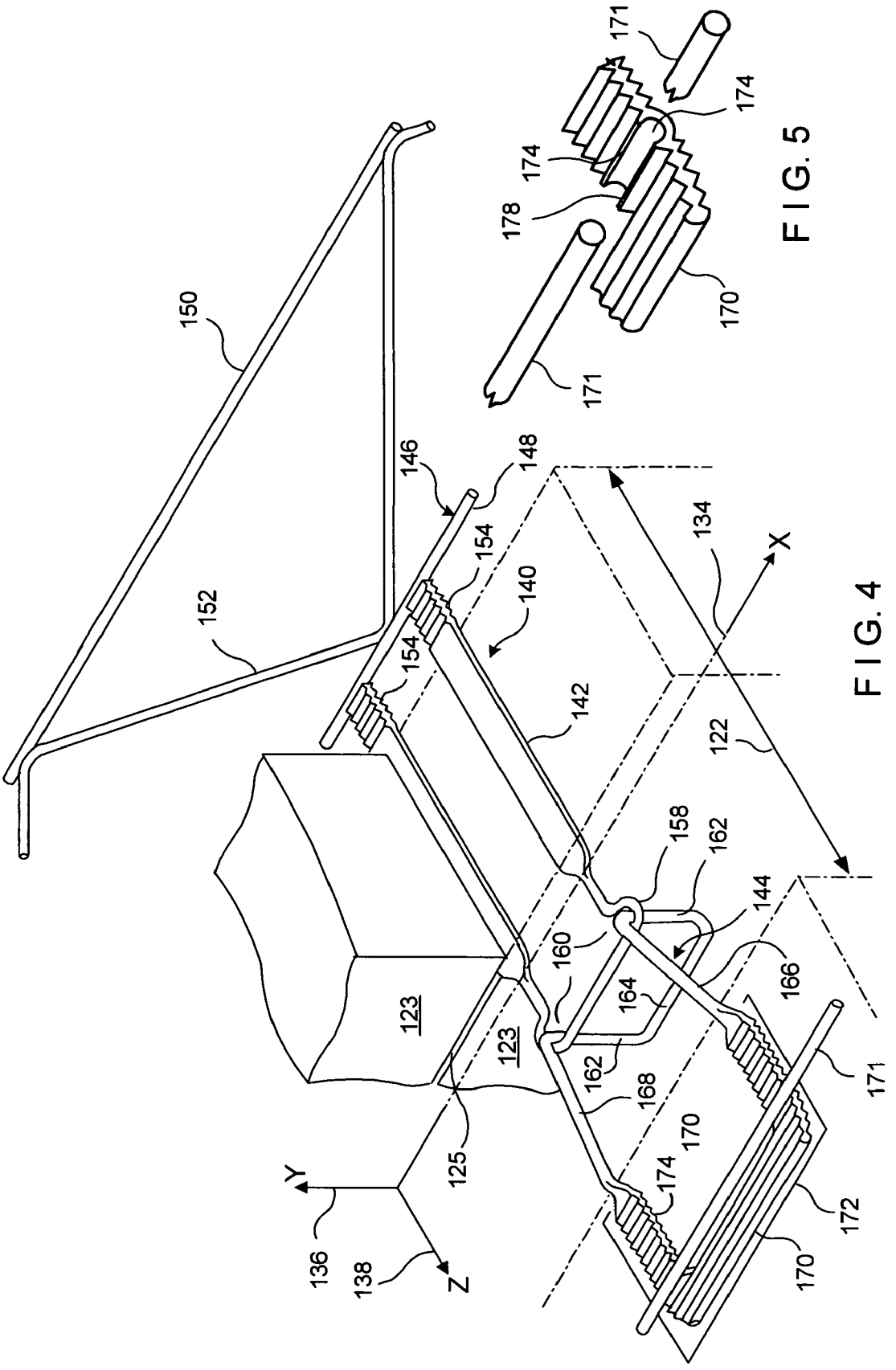
150
152
146
148
154
154
140
142
134
X
122
158
162
144
160
166
164
123
123
162
168
170
174
125
Y
136
138
Z
172
170
171
171
174
174
178
170

FIG. 4

FIG. 5

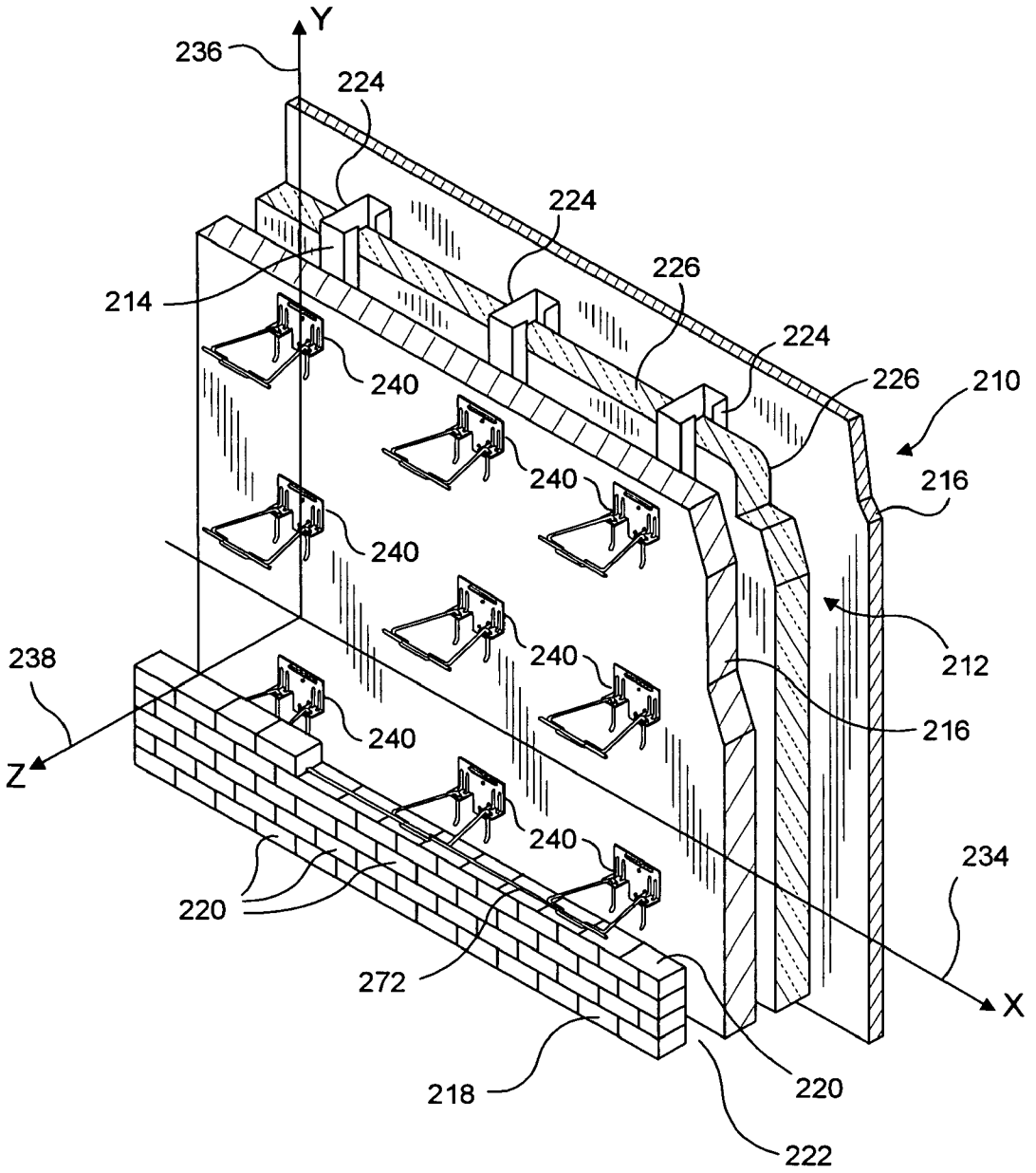
Y
236
224
224
226
214
224
226
210
240
240
216
240
240
212
238
240
216
Z
240
234
220
272
X
218
220
222

FIG. 6

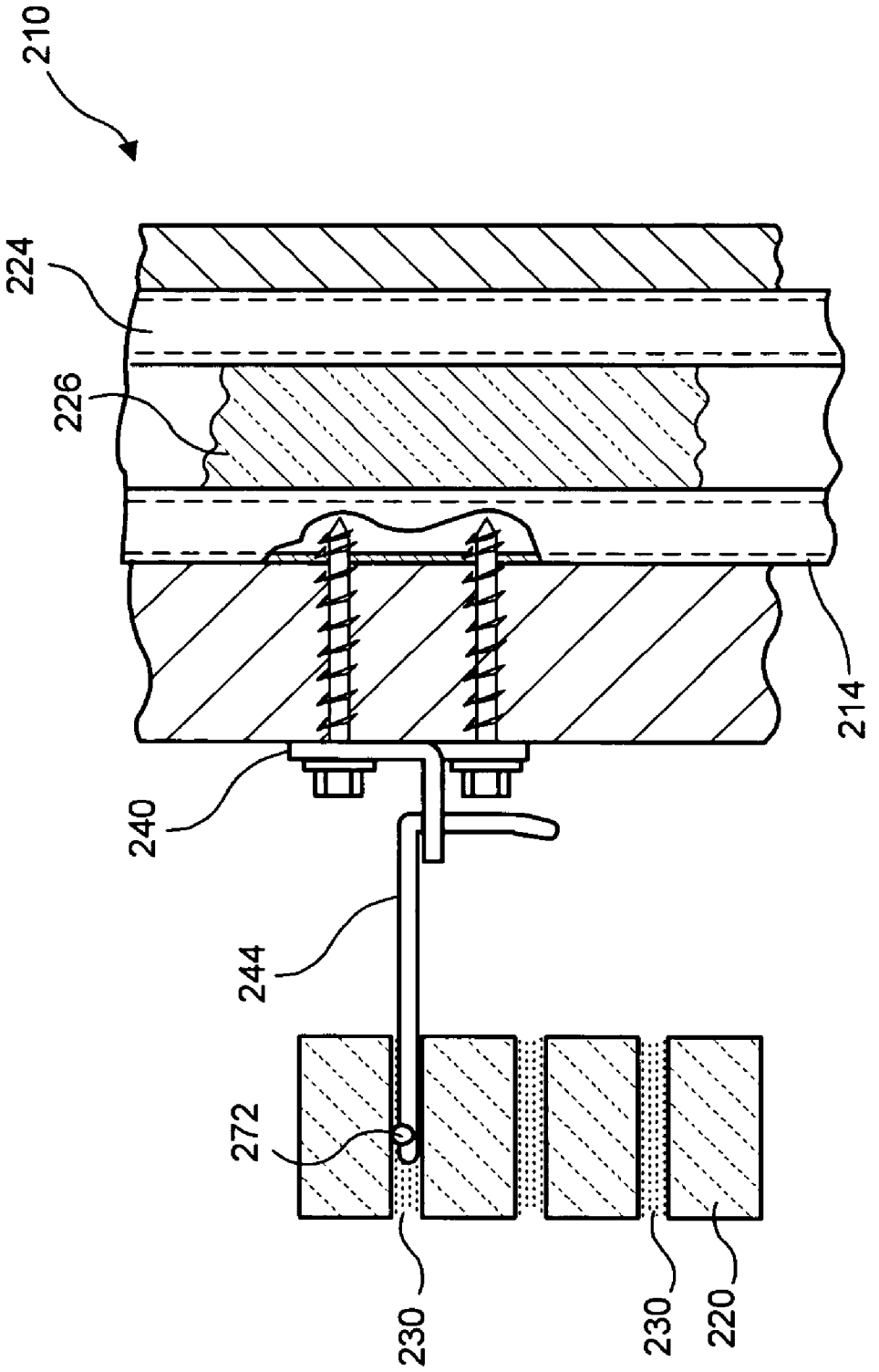

FIG. 7

FIG. 8

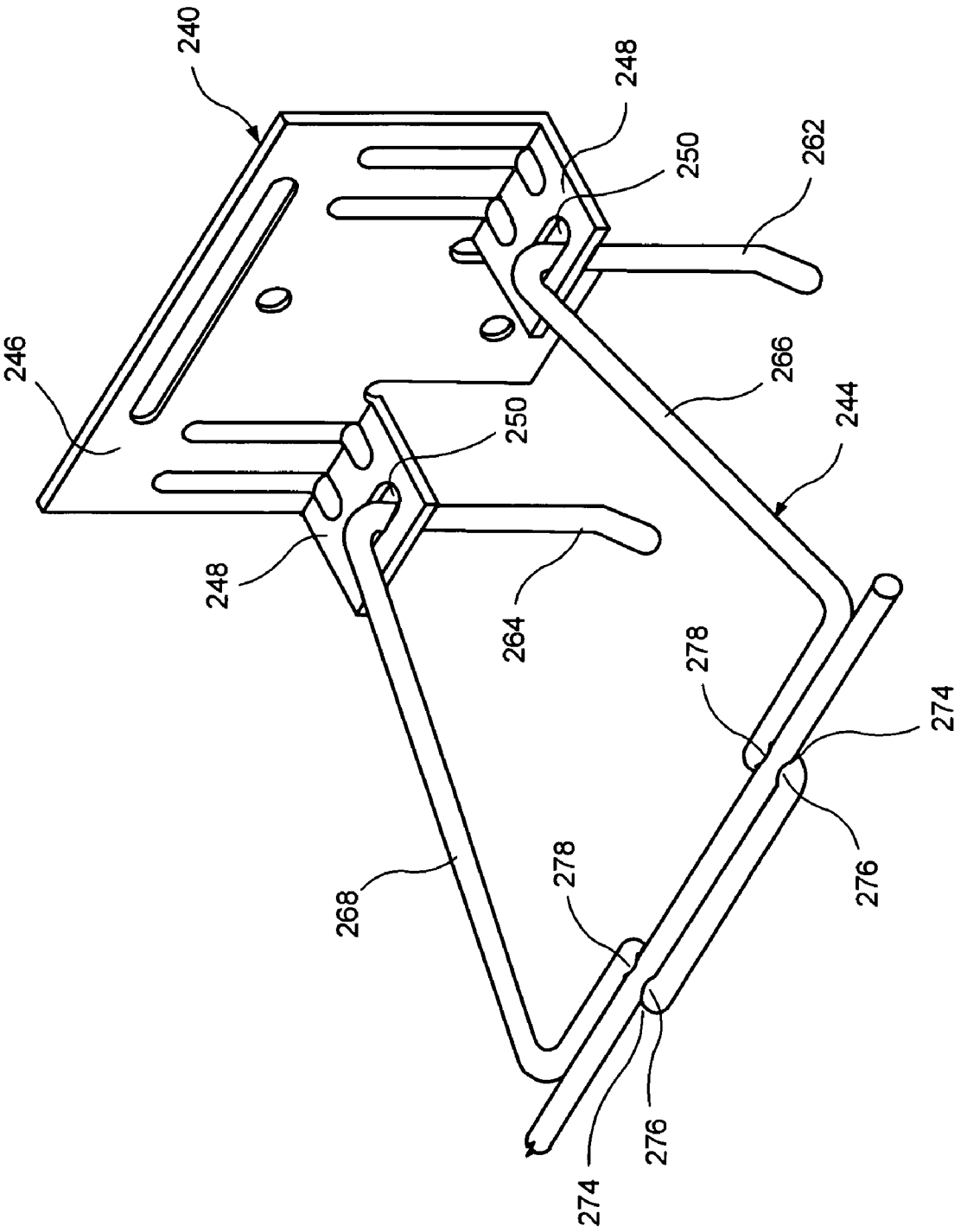
240
248
250
262
246
266
244
250
248
264
278
274
268
278
276
276
274

SNAP-IN WIRE TIE

BACKGROUND OF THE INVENTION

1. Field of the Invention

This invention relates to an improved anchoring arrangement for use in conjunction with a seismic construction system for cavity walls having an inner wythe and an outer wythe. More particularly, the invention relates to construction accessory devices, namely, snap-in wire ties, for emplacement in the outer wythe. These devices accommodate the encapturing of a reinforcing wire therewithin. The invention is applicable to seismic structures having an outer wythe of brick or stone facing in combination with an inner wythe of masonry block or dry wall construction and with various forms of insulation.

2. Description of the Prior Art

In the past, investigations relating to the effects of various forces, particularly lateral forces, upon brick veneer masonry construction demonstrated the advantages of having a continuous wire embedded in the mortar joint of anchored veneer walls, such as facing brick or stone veneer. The seismic aspect of these investigations were referenced in the prior patent, namely U.S. Pat. No. 4,875,319, to Ronald P. Hohmann, an inventor hereof.

The assignee of U.S. Pat. No. 4,875,319, Hohmann & Barnard, Inc., successfully commercialized the device under the SeismiClip trademark. For many years the white plastic clip tying together the veneer anchor and the reinforcement wire in the outer wythe has been a familiar item in commercial seismic-zone buildings. There has been a long felt need to combine the clip and veneer anchor as detailed hereinbelow. The combination item reduces the number of "bits and pieces" brought to the job site and simplifies installation.

Recently, there have been significant shifts in public sector building specifications which have resulted in architects and architectural engineers requiring larger and larger cavities in the exterior cavity walls of public buildings. These requirements are imposed without corresponding decreases in wind shear and seismic resistance levels or increases in mortar bed joint height. Thus, the wall anchors needed are restricted to occupying the same ⅜-inch bed joint height in the inner and outer wythes. Thus, the veneer facing material is tied down over a span of two or more times that which had previously been experienced. Exemplary of the public sector building specification is that of the Energy Code Requirement, Boston, Mass. (See Chapter 13 of 780 CMR, Seventh Edition). This Code sets forth insulation R-values well in excess of prior editions and evokes an engineering response opting for thicker insulation and correspondingly larger cavities.

Besides earthquake protection, the failure of several high-rise buildings to withstand wind and other lateral forces has resulted in the incorporation of a requirement for continuous wire reinforcement in the Uniform Building Code provisions. The inventor's related SeismiClip®. and DW-10-X®. products (manufactured by Hohmann & Barnard, Inc., Hauppauge, N.Y. 11788) have become widely accepted in the industry. The use of a continuous wire in masonry veneer walls has also been found to provide protection against problems arising from thermal expansion and contraction and improving the uniformity of the distribution of lateral forces in a structure.

The following patents are believed to be relevant and are disclosed as being known to the inventor hereof:

U.S. Pat. No.	Inventor	Issue Date
3,377,764	Storch	Apr. 16, 1968
4,021,990	Schwalberg	May 10, 1977
4,373,314	Allan	Feb. 15, 1983
4,473,984	Lopez	Oct. 02, 1984
4,598,518	Hohmann	Jul. 08, 1986
4,869,038	Catani	Sep. 26, 1989
4,875,319	Hohmann	Oct. 24, 1989
5,454,200	Hohmann	Oct. 03, 1995
6,668,505	Hohmann et al.	Dec. 30, 2003
6,789,365	Hohmann et al.	Sep. 14, 2004
6,851,239	Hohmann et al.	Feb. 08, 2005

It is noted that these devices are generally descriptive of wire-to-wire anchors and wall ties and have various cooperative functional relationships with straight wire runs embedded in the interior and/or exterior wythe.

U.S. Pat. No. 3,377,764—D. Storch—Issued Apr. 16, 1968

Discloses a bent wire, tie-type anchor for embedment in a facing exterior wythe engaging with a loop attached to a straight wire run in a backup interior wythe.

U.S. Pat. No. 4,021,990—B. J. Schwalberg—Issued May 10, 1977

Discloses a dry wall construction system for anchoring a facing veneer to wallboard/metal stud construction with a pronged sheetmetal anchor. Like Storch '764, the wall tie is embedded in the exterior wythe and is not attached to a straight wire run.

U.S. Pat. No. 4,373,314—J. A. Allan—Issued Feb. 15, 1983

Discloses a vertical angle iron with one leg adapted for attachment to a stud; and the other having elongated slots to accommodate wall ties. Insulation is applied between projecting vertical legs of adjacent angle irons with slots being spaced away from the stud to avoid the insulation.

U.S. Pat. No. 4,473,984—Lopez—Issued Oct. 2, 1984

Discloses a curtain-wall masonry anchor system wherein a wall tie is attached to the inner wythe by a self-tapping screw to a metal stud and to the outer wythe by embedment in a corresponding bed joint. The stud is applied through a hole cut into the insulation.

U.S. Pat. No. 4,598,518—R. Hohmann—Issued Jul. 7, 1986

Discloses a dry wall construction system with wallboard attached to the face of studs which, in turn, are attached to an inner masonry wythe. Insulation is disposed between the webs of adjacent studs.

U.S. Pat. No. 4,869,038—M. J. Catani—Issued Sep. 26, 1989

Discloses a veneer wall anchor system having in the interior wythe a truss-type anchor, similar to Hala et al. '226, supra, but with horizontal sheetmetal extensions. The extensions are interlocked with bent wire pintle-type wall ties that are embedded within the exterior wythe.

U.S. Pat. No. 4,879,319—R. Hohmann—Issued Oct. 24, 1989

Discloses a seismic construction system for anchoring a facing veneer to wallboard/metal stud construction with a pronged sheetmetal anchor. Wall tie is distinguished over that of Schwalberg '990 and is clipped onto a straight wire run.

U.S. Pat. No. 5,454,200—R. Hohmann—Issued Oct. 3, 1995

Discloses a facing anchor with straight wire run and mounted along the exterior wythe to receive the open end of wire wall tie with each leg thereof being placed adjacent one side of reinforcement wire. As the eye wires hereof have scaled eyelets or loops and the open ends of the wall ties are sealed in the joints of the exterior wythes, a positive interengagement results.

U.S. Pat. No. 6,668,505—Hohmann et al.—Issued Dec. 30,

Discloses high-span and high-strength anchors and reinforcement devices for cavity walls combined with interlocking veneer ties are described which utilize reinforcing wire and wire formatives to form facing anchors, truss or ladder reinforcements, and wall anchors providing wire-to-wire connections therebetween.

U.S. Pat. No. 6,789,365—R. Hohmann et al.—Issued Sep. 14, 2004

Discloses side-welded anchor and reinforcement devices for a cavity wall. The devices are combined with interlocking veneer anchors, and with veneer reinforcements to form unique anchoring systems. The components of each system are structured from reinforcing wire and wire formatives.

U.S. Pat. No. 6,851,239—Hohmann et al.—Issued Feb. 8, 2005

Discloses a high-span anchoring system described for a cavity wall incorporating a wall reinforcement combined with a wall tie which together serve a wall construct having a larger-than-normal cavity. Further the various embodiments combine wire formatives which are compressively reduced in height by the cold-working thereof. Among the embodiments is a veneer anchoring system with a low-profile wall tie for use in a heavily insulated wall.

None of the above provide a completely reinforced arrangement of both the inner and the outer wythes, and all of the above lack a simplified snap-in anchor to encapture the reinforcement wire as described hereinbelow.

SUMMARY

In general terms, the invention disclosed hereby is a seismic construction system for cavity walls having an inner and outer wythe. The system includes snap-in wire ties for emplacement in the outer wythe. The seismic construction system hereof is applicable to construction of a wall having an inner wythe which can either be of dry wall construction or masonry block and an outer wythe and to insulated and non-insulated structures. The wythes are in a spaced apart relationship and form a cavity therebetween. In the disclosed system, a unique combination of a wall anchor (attachable to either ladder- or truss-type reinforcement for masonry inner wythes or to metal studs of a dry wall construct), a snap-in wire tie, and a continuous wire reinforcement is provided. The invention contemplates that the snap-in wire ties are wire formatives with pintles depending into the wall cavity for connections between the snap-in wire tie and the wall anchor.

In the first embodiment of this invention, the inner wythe is constructed from a masonry block material, the masonry anchor is a wire formative attached to a ladder-type reinforcement in a manner similar to the wall anchor shown in Hohmann, U.S. Pat. No. 6,789,365. The eye wires thereof extend into the cavity between the wythes. Each pair of eye wires accommodates the interengagement therewith of the pintles of the snap-in wire ties.

The snap-in wire tie is then positioned so that the insertion end thereof is secured to a continuous reinforcement wire that snaps into wire housings within the snap-in wire ties. The snap-in wall tie and the continuous wire housed therein are then embedded in the bed joint of the outer wythe. The snap-in feature of the anchor here replaces the traditional function of the seismic clip for accommodating a straight wire run (see U.S. Pat. No. 4,875,319) and receiving the open end of the box tie. As the eye wires have sealed eyelets or loops with predetermined dimensions the horizontal movement of the construct is restricted accordingly.

In a second embodiment with a masonry block inner wythe, the lessons learned in forming low-profile and high-span anchoring components are incorporated herein. The familiar veneer anchor for low-profile applications with corrugated surfaces is refashioned with wire housing portions to accept in a snap-fit relationship a continuous wire reinforcement.

In another mode of practicing this invention, the inner wythe is a dry wall construct. Here, the dry-wall anchor, is a metal stamping and is attached by sheetmetal screws to the metal vertical channel members of the wall. Each dry-wall anchor accommodates in horizontally extending portions, the pintles of the wire formatives snap-in wire tie. As in the case of the masonry inner wythe, the insertion end of the wire tie is then positioned on the outer wythe so that a continuous reinforcement wire clips into and is securable to the outer wythe anchor. This anchor and a straight wire run are embedded in the bed joint of the outer wythe.

OBJECTS AND FEATURES OF THE INVENTION

It is an object of the present invention to provide in a seismic construction system having an outer wythe and an inner wythe, a snap-in wire tie anchor that interengages a wall anchor which system further includes a continuous wire reinforcement in the mortar joint of the outer wythe.

It is another object of the present invention to provide labor-saving devices to simplify seismic-type installations of brick and stone veneer and the securement thereof to an inner wythe.

It is yet another object of the present invention to provide a seismic construction system to snap together the continuous wire reinforcement in a positive manner to the adjacent wire tie.

It is a further object of the present invention to provide a snap-in wire tie construction system comprising a limited number of component parts that are economical of manufacture resulting in a relatively low unit cost.

It is yet another object of the present invention to provide a seismic construction system which restricts lateral and horizontal movements of the facing wythe with respect to the inner wythe, but is adjustable vertically.

It is a feature of the present invention that the snap-in wire tie, after being inserted into the corresponding bed joint receives in the wire housing portions thereof a reinforcing wire.

It is another feature of the present invention that the snap-in wire ties are utilizable with either a masonry block having aligned or unaligned bed joints or for a dry wall construct that secures to a metal studs.

Other objects and features of the invention will become apparent upon review of the drawings and the detailed description.

BRIEF DESCRIPTION OF THE DRAWINGS

In the following drawings, the same parts in the various views are afforded the same reference designators.

FIG. **1** is a perspective view of a first embodiment of a snap-in wire tie system of this invention, including a side-welded, wall anchor and shows a wall with an inner wythe of masonry block and an outer wythe of brick veneer;

FIG. **2** is a partial perspective view of FIG. **1** showing details of the wall anchor and the veneer tie with snap-in housing for the seismic reinforcement wire;

FIG. **3** is a cross-sectional view of the snap-in housing of the veneer anchor of FIG. **2**;

FIG. **4** is a partial perspective view of a second embodiment of a snap-in wire tie for a seismic construction system and includes a backup wall truss-type reinforcement with a low-profile, high-span wall anchor with a T-type horizontal opening and a bent-box, snap-in wire tie;

FIG. **5** is a partial perspective view of FIG. **4** showing details of the bent box, snap-in wire tie;

FIG. **6** is a perspective view of a third embodiment of a snap-in wire tie of this invention providing for seismic reinforcement of a cavity wall structure, wherein the building system therefor includes a wall anchor for a drywall inner wythe, an interlocking snap-in wire tie, and a continuous wire reinforcement;

FIG. **7** is a cross-sectional view of FIG. **6** taken along a yz-plane that includes the longitudinal axis of one leg of the snap-in wire tie; and,

FIG. **8** is a partial perspective view of FIG. **6** showing details of the wall anchor, the snap-in wire tie, and the continuous wire-reinforcement.

DESCRIPTION OF THE PREFERRED EMBODIMENTS

The description which follows is of three embodiments of the snap-in wire tie devices of this invention, which devices are suitable for cavity wall seismic applications. Two of the embodiments apply to cavity walls with masonry block inner wythes, and the third, to cavity walls with a dry wall (sheetrock) inner wythes. The wall anchor of the first embodiment is adapted from that shown in U.S. Pat. No. 6,789,365 of the inventors hereof.

Referring now to FIGS. **1** and **3**, the first embodiment of the snap-in wire tie system including a seismic wire reinforcement of this invention is shown and is referred to generally by the numeral **10**. In this embodiment, a wall structure **12** is shown having an backup wall **14** of masonry blocks **16** and a facing wall or veneer **218** of facing brick or stone **20**. Between the backup wall **14** and the facing wall **18**, a cavity **22** is formed, which cavity **22** extends outwardly from surface **24** of backup wall **14**.

In this embodiment, successive bed joints **26** and **28** are formed between courses of blocks **16** and the joints are substantially planar and horizontally disposed. Also, successive bed joints **30** and **32** are formed between courses of facing brick **20** and the joints are substantially planar and horizontally disposed. For each structure, the bed joints **26**, **28**, **30** and **32** are specified as to the height or thickness of the mortar layer and such thickness specification is rigorously adhered to so as to provide the uniformity inherent in quality construction. Selected bed joint **26** and bed joint **30** are constructed to align, that is to be substantially coplanar, the one-with the other.

For purposes of discussion, the exterior surface **24** of the backup wall **14** contains a horizontal line or x-axis **34** and an intersecting vertical line or y-axis **36**. A horizontal line or z-axis **38**, normal to the xy-plane, also passes through the coordinate origin formed by the intersecting x- and y-axes. In the discussion which follows, it will be seen that the various anchor structures are constructed to restrict movement interfacially—wythe vs. wythe-along the z-axis and, in this embodiment, along the x-axis. The device **10** includes a wall anchor **40** constructed for embedment in bed joint **26**, which, in turn, includes two legs **42** extending into cavity **22**. Further, the device **10** includes a wire formative veneer tie or anchor **44** for embedment in bed joint **30**. In order to meet seismic requirements, a continuous wire reinforcement, described infra, is included in seismic system hereof.

The wall anchor **40** is shown in FIGS. **1** and **2** as being emplaced on a course of blocks **16** in preparation for embedment in the mortar of bed joint **26**. In the best mode of practicing this embodiment, a ladder-type wall reinforcement wire portion **46** is constructed of a wire formative with two parallel continuous straight wire members **48** and **50** spaced so as, upon installation, to each be centered along the outer walls of the masonry blocks **16**. An intermediate wire bodies or cross rods **52** are interposed therebetween and connect wire members **48** and **50** forming rung-like portions of the ladder structure **46**.

At intervals along the wall reinforcement **46**, spaced pairs of transverse wire members **54** are attached thereto and are attached to each other by a rear leg **56** therebetween. These pairs of wire members **54** extend into cavity **22** to snap-in wire tie **44**. As will become clear by the description which follows, the spacing between the transverse wire member **54** is constructed to limit the x-axis movement of the construct. Each transverse wire member **54** has at the end opposite the attachment end an eye wire portion **58** formed contiguous therewith.

Upon installation, the eye **60** of eye wire portion **58** is constructed to be within a substantially horizontal plane normal to exterior surface **24**. The eye **60** is dimensioned to accept a pintle of the wire tie or veneer anchor **44** therethrough and has a slightly larger diameter than that of the anchor. This relationship minimizes the movement of the construct in an xz-plane. For positive engagement, the eye **60** of eye wire portion **58** is sealed forming a closed loop.

The snap-in wire tie **44** is, when viewed from a top or bottom elevation, generally U-shaped and is dimensioned to be accommodated by the pair of eye wires **58** previously described. The anchor **44** has two rear leg portions or pintles **62** and **64**, two parallel side leg portions **66** and **68**, and a front leg portion **70**, which have been compressively reduced in height. The front leg portion **70** accommodates continuous wire reinforcement member **71** which is threaded through swaged indentations **73** and **75**.

As shown in FIG. **3**, swaged indentation **73** is formed in the surface of side leg **66** so that, upon installation, the reinforcing wire **71** placed therein snaps firmly into place prior to being embedded in bed joint **30**. Also as shown in FIG. **3**, swaged indentation **75** is formed in the surface of front leg **70** so that, upon installation, the continuous reinforcing wire **71** placed therein snaps firmly into place prior to being embedded in bed joint **30**. Although the swaged indentations **73** and **75** are described as shown, the function of the veneer anchor **44** would be the same if the indentations were in side leg **68**. The longitudinal axes of leg portions **66**, **68** and **70** are substantially coplanar. The pintles **62** and **64** are dimensioned to function cooperatively with the eyes **60** of eye wire portions **58** and thereby limits the movement of the construct in an xz-plane. It is within the contemplation of this invention that the eyes **60** may be

slightly elongated in the direction to accommodate the tolerance during seating of the reinforcing wire **71**.

In this embodiment, indentations **73** and **75** are swaged into leg portions **66** and **68**, respectively, which indentations are dimensioned to accommodate and cradle continuous reinforcing wire **71**. With the reinforcing wire **71** installed in a snap-fit relationship in anchor **44** as described, the anchoring system meets building code requirements for seismic construction and the wall structure conforms to the testing standards therefor.

The above-described arrangement of wire formatives has been strengthened in several ways. First, in place of the standard 9-gage (0.148-inch diameter) wall reinforcement wire, a 3/16-inch (0.187-inch diameter) wire is optionally used throughout. Here, wall reinforcement **46**, wall anchor **40**, the veneer tie **44**, and veneer reinforcing wire **71** are all formed from 0.187-inch diameter wire. The snap fit of this invention requires a force of 5 to 10 lbs. To fully seat the reinforcing wire within the snap-in housing of the wire tie **44**.

The description which follows is of a second embodiment of the snap-in wire tie. In this embodiment the wall anchor portion is adapted from the high-span anchor and wall reinforcement device of U.S. Pat. No. 6,668,505 by the above-named inventors. For ease of comprehension, where similar parts are used reference designators "100" units higher are employed. Thus, the wire tie **144** of the second embodiment is analogous to the wire tie **44** of the first embodiment. Referring now to FIG. **4**, the second embodiment of a snap-in wire tie of this invention is shown and is referred to generally by the numerals **140** for the wall anchor, **144** for the wire tie, and **146** for the backup wall reinforcement. As this embodiment is similar to the first embodiment, the wall structure is not shown, but the wall structure of FIG. **1** is incorporated herein by reference.

The backup wall is insulated with strips of insulation **123** attached to the cavity surface of the backup wall and has seams **125** between adjacent strips coplanar with adjacent bed joints. In this embodiment, the cavity **122** is larger-than-normal and has a 5-inch span.

For purposes of discussion, the exterior surface of the insulation **125** contains a horizontal line or x-axis **134** and an intersecting vertical line or y-axis **136**. A horizontal line or z-axis **138**, normal to the xy-plane, also passes through the coordinate origin formed by the intersecting x- and y-axes.

The wall anchor **140** is shown in FIG. **4** as having an insulation-spanning portion or extension **142** for interconnection with wire tie **144**. In this embodiment, a truss-type wall reinforcement **146** is constructed of a wire formative with two parallel continuous straight side wire members **148** and **150** spaced so as, upon installation, to each be centered along the outer walls of the masonry blocks. An intermediate wire body **152** is interposed therebetween and is butt welded to wire members **148** and **150**, thus separating and connecting side wires **148** and **150** of reinforcement **146**.

At intervals along the truss-type reinforcement **146**, spaced pairs of transverse wire members **154** are attached by electric resistance welding in accord with ASTM Standard Specification A951. These pairs of wire members **154** extend into the cavity **122**. The spacing therebetween limits the x-axis movement of the construct. Each transverse wire member **154** has at the end opposite the attachment end a T-head portion **158** formed continuous therewith. Upon installation, the T-head opening or throat **160** is constructed to be within a substantially horizontal or xz-plane, which is normal to the cavity walls. The T-head throat **160** is horizontally aligned to accept the downwardly bent portion **162** of snap-in wire tie **144** threaded therethrough. The T-head throat **160** is slightly wider than the bent portion of the tie and the diameter of the wire of the bent portion fits snugly therewithin. These dimensional relationships minimize the x- and z-axis movement of the construct. For ensuring engagement, the bent portion of wire tie **144** is available in a variety of lengths.

The snap-in wire tie **144** is a low-profile wire formative, and, when viewed from a top or bottom elevation, generally box-shaped. The low-profile wall tie **144** is dimensioned to be accommodated by T-head portion **158** described, supra. The wire tie **144** has two downwardly bent leg portions **162** and a connecting rear leg **164**, two substantially parallel side leg portions **166** and **168**, which are substantially at right angles and attached to the leg portions **162** and **164**, respectively, and a front leg portion **170**. An insertion portion **172** of veneer tie **144**, upon installation extends beyond the cavity **122** into the bed joint of the facing wall (not shown). This portion includes front leg portion **170** and part of side leg portions **166** and **168**. The longitudinal axes of side leg portions **166** and **168** and the longitudinal axis of the front leg portion **170** are substantially coplanar.

In the second embodiment in adapting the snap-in wire tie for high-span applications, it is noted that the above-described arrangement of wire formatives is strengthened in several respects. First, in place of the standard 9-gage (0.148-inch diameter) wall reinforcement wire, a 3/16-inch (0.187-inch diameter) wire is used. Additionally a 0.250-inch wire is used to form both the wall anchor **140** and the veneer anchor **144**. Here the insertion ends of only the wall anchor **140** and the snap-in wire tie **144** are compressively reduced in height as described in Hohmann, U.S. Pat. No. 6,668,505. In this regard, wall anchor **140** is reduced by up to 70%, but at least by the amount required to be within the envelope of wall reinforcement **146**. Thus, upon butt welding the height is not increased.

Also, the successive insulation strips **123** when in an abutting relationship the one with the other are sufficiently resilient to seal at seam **125** without air leakage therebetween. The extended insulation-spanning portions **142** of wall anchor **140** are flattened. This results in minimal interference with the seal at seam **125**.

Upon compressing the insertion ends of wall anchors **140** and **144**, a corrugated pattern is optionally impressed thereon. The ridges and valleys of the corrugations **176** are shown in FIG. **9** and are impressed so that, upon installation, the corrugations **176** are parallel to the x-axis **134**. In FIG. **5**, a detail of the snap-in housing **174** is shown. Here the continuous reinforcement wire **171** is broken away and the clamping jaws **176** and **178** are shown. The snap fit of this embodiment requires a slightly firmer insertion force than in the first embodiment occurring in the 7 to 12 lb. range.

The insertion portion **172** of veneer tie **144** is considerably compressed and, while maintaining the same mass of material per linear unit as the adjacent wire formative, the vertical height is reduced. The vertical height of insertion portion **172** is reduced so that, upon installation, mortar of bed joint flows around the insertion portion **172**. Upon compression, a pattern or corrugation is impressed on either or both of the upper and lower surfaces of insertion portion **172**. When the mortar of bed joint flows around the insertion portion, the mortar flows into the valleys of the corrugations. The corrugations enhance the mounting strength of the veneer tie **144** and resist force vectors along the z-axis **138**. With veneer tie **144** compressed as described, the veneer tie is characterized by maintaining substantially all the tensile strength as prior to compression. A variant of the second

embodiment for a drywall inner wythe employs a T-LOK tie wall anchor as described in U.S. Pat. No. 5,816,008 of Ronald P. Hohmann and manufactured by Hohmann and Barnard, Inc., Hauppauge, N.Y. 11788.

The description which follows is of a third embodiment of the snap-in wire tie system. For ease of comprehension, where similar parts are used reference designators "200" units higher are employed. Thus, the wall tie **244** of the third embodiment is analogous to the wall tie **44** of the first embodiment.

Referring now to FIGS. **6** to **8**, the third embodiment of the snap-in wire tie system is shown and is referred to generally by the numeral **210**. The system **210** employs a sheetmetal wall anchor, Catalog #HB-200. The dry wall structure **212** is shown having an interior wythe **214** with a wallboard **216** as the interior and exterior facings thereof. An exterior wythe **218** of facing brick **220** is attached to dry wall structure **212** and a cavity **222** is formed therebetween. The dry wall structure **212** is constructed to include, besides the wallboard facings **216**, vertical channels **224** with insulation layers **226** disposed between adjacent channel members **224**. Selected bed joints **228** and **230** are constructed to be in cooperative functional relationship with the snap-in wire tie described in more detail below. For purposes of discussion, the exterior surface **232** of the interior wythe **214** contains a horizontal line or x-axis **234** and an intersecting vertical line or y-axis **236**. A horizontal line or z-axis **238** also passes through the coordinate origin formed by the intersecting x- and y-axes. The system **210** includes a dry wall anchor **240** constructed for attachment to vertical channel members **224**, a **242** constructed for embedment in joint **228** and an interconnecting wall tie member **244**.

Reference is now directed to the construction of the wall anchor **240** comprising a backing or base plate member **246** and projecting pintle-receiving portions **248**. The projecting portions **248** are punched-out from the base plate member **246** so as to have, upon installation, horizontally disposed apertures which, as best seen in FIG. **8**, provide a pair of wire-tie-receiving receptors **250**. The apertures are substantially circular configurations and are formed in plate members **248**. Upon installation the projecting portions **248** are thus disposed substantially at right angles with respect to the plate member **246**. To ease tolerance stack up receptors **250** may be slightly elongated along the z-axis thereof. The plate member **246** is also provided with mounting holes **256** at the upper and lower ends thereof.

As is best seen in FIG. **8**, the projecting pintle-receiving portions **248** are spaced from the plate member **246** and are adapted to receive the pintles of snap-in wire tie **244** therewithin. In the fabrication of the dry wall as the inner wythe of this construction system **210**, the channel members **224** are initially secured in place. In this regard, the channel members **224** may also comprise the standard framing members of a building. Sheets of exterior wallboard **216**, which may be of an exterior grade gypsum board, are positioned in abutting relationship with the forward flange **258** of the channel member **224**. While the insulating layer has herein been described as comprising a gypsum board, it is to be noted that any similarly suited rigid or flexible insulating material may be used herein with substantially equal efficacy.

After the initial placement of the flexible insulation layer **226** and the wallboard **216**, the veneer anchors **240** are secured to the surface of the wallboard **216** in front of channel members **224**. The sheetmetal Catalog #HB-200 (Hohmann & Barnard, Inc., Hauppauge, N.Y. 11788). Thereafter, sheetmetal screws **260** are inserted into the mounting holes **256** to fasten the anchor **240** to the flange **258** and to channel member **224**.

The wire tie **244** is, when viewed either as a top or bottom elevation is substantially a U-shaped member and is dimensioned to be accommodated within apertures **250** previously described. The wire tie **244** has two rear leg portions or pintles **262** and **264**, two substantially parallel side leg portions **266** and **268**, and a front leg portion **270**. The rear leg portions or pintles **262** and **264** are spaced apart by the spacing between apertures **250** of the projecting pintle-receiving portions **248**. The longitudinal axes of leg portions **266**, **268** and **270** are substantially coplanar. The rear leg portions **262** and **264** are structured to function cooperatively with the sizing of the apertures **250** of the projecting portions **248** to limit the x- and the y-axis movement of the construct.

The front leg portion **270** has been configured, as will be seen in the description that follows, to accommodate therewithin in a snap-fit relationship the reinforcement wire or straight wire member **271** of predetermined diameter. The front leg portion **270** is attached to and is contiguous with side leg portions **266** and **268** and is structured to underlie the reinforcement wire while exerting a clamping pressure thereon. The anchoring system hereof meets' building code requirements for seismic construction and the wall structure reinforcement of both the inner and outer wythes exceeds the testing standards therefor. In contradistinction to the first embodiment, the front leg portion **270** is disposed on both sides of the reinforcing wire **271** and has two snap-in housings **274** impressed therein. Each housing **274** have a pair of clamping jaws **276** and **278** which are spaced to require an insertion force of from 5 to 10 lbs. With this configuration the bed joint **228** height specification is readily maintained. As differentiated from the first two embodiments, the dry wall construction system **210** provides for the structural integrity by the securement of the veneer anchor construction to the channel member.

Because many varying and different embodiments may be made within the scope of the inventive concept herein taught, and because many modifications may be made in the embodiments herein detailed in accordance with the descriptive requirement of the law, it is to be understood that the details herein are to be interpreted as illustrative and not in a limiting sense.

What is claimed is:

1. A seismic construction system for use in the construction of wall structures having an inner wythe and an outer wythe in a spaced apart relationship forming a cavity therebetween, said inner wythe is a masonry wall with a ladder- or truss-type wall reinforcement means embedded therein, said system comprising, in combination:

a wall anchor adapted to be secured to said inner wythe, said wall anchor connected to said reinforcement means and extending from said reinforcement means into said cavity, said wall anchor, in turn, comprising:

at least one pair of pintle-receiving eye wires extending from said inner wythe having a receptor portion, upon installation thereof, extending into said cavity and terminating therewithin;

a receiving aperture in each receptor portion and, with said receptor installed in said wall structure, each receptor portion is disposed horizontally in said cavity;

a snap-in wire tie adapted for embedment in said outer wythe, said snap-in wire tie having a pair of pintles and an insertion portion, each said pair of pintles being disposed in one pair of said pintle-receiving eye wires, said snap-in wire tie, in turn, comprising:

at least two wire housings formed in said insertion portion adapted to securely clamp a wire disposed therewithin; and,

at least one reinforcement wire portion disposed longitudinally in said outer wythe and securely inserted into said wire housings of said snap-in wire tie;

whereby, upon securement of said wall anchor to said inner wythe, the disposition of said snap-in wire tie into receptor portions thereof, and the embedment of said insertion portion of said wire tie together with a reinforcement wire portion then a seismic construct is formed.

2. A seismic construction system as described in claim **1** wherein the force required to insert said reinforcement wire portion into said wire housings is between 5 and 12 lbs.

3. A seismic construction system as described in claim **1** wherein said pintles are formed from wire stock and said receiving apertures are dimensioned to minimize movement in a horizontal plane.

4. A seismic construction system for use in the construction of wall structures having an inner wythe and an outer wythe in a spaced apart relationship forming a cavity therebetween, said inner wythe with insulation thereon having a thickness requiring a high-span cavity, said system comprising, in combination:

a wall anchor of low-profile construction adapted to be secured to said inner wythe, in turn, comprising:

at least one receptor portions extending from said inner wythe having a receptor portion, upon installation thereof, extending into said cavity and terminating therewithin;

a receiving aperture in each receptor portion and, with said receptor installed in said wall structure, each said receptor portion is disposed horizontally in said cavity;

a snap-in wire tie of low-profile construction adapted for embedment in said outer wythe, said snap-in wire having a rear leg and a low-profile insertion portion, said rear leg for interlocking with said receptor portions, said snap-in wire tie, in turn, comprising:

at least two wire housings formed in said low-profile insertion portion for encapturing a reinforcement wire portion adapted to securely clamp a wire disposed therewithin; and,

at least one reinforcement wire portion disposed longitudinally in said outer wythe and securely inserted by a force between 7 and 12 lbs. into said wire housings of said snap-in wire tie;

whereby, upon securement of said wall anchor to said inner wythe, the disposition of said snap-in wire tie into receptor portions thereof, and the embedment of said insertion portion of said wire tie together with a reinforcement wire portion then a seismic construct is formed.

5. A seismic construction system as described in claim **4** wherein said rear leg is formed from wire stock and said receiving aperture is dimensioned to minimize movement in a horizontal plane.

* * * * *